KS51-01-03

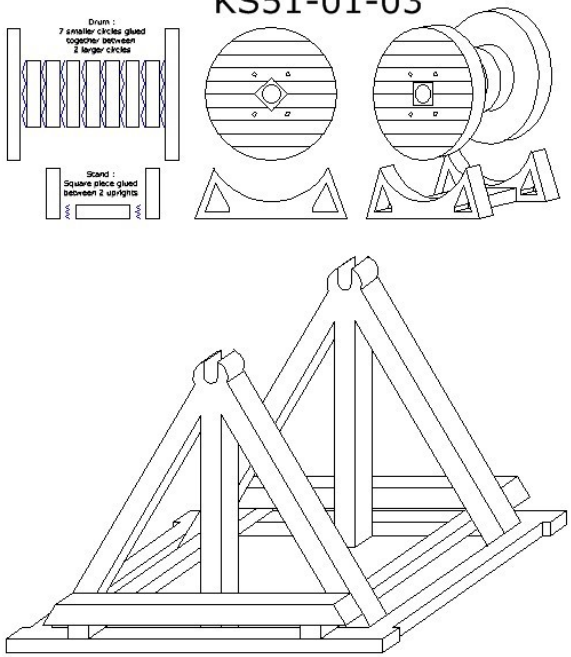

KS Laser Designs Ltd

KS51-01-03

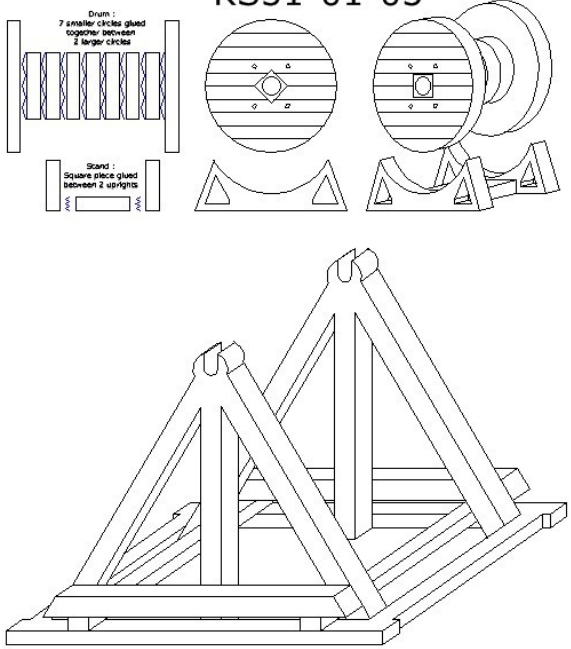

KS Laser Designs Ltd

KS51-01-03

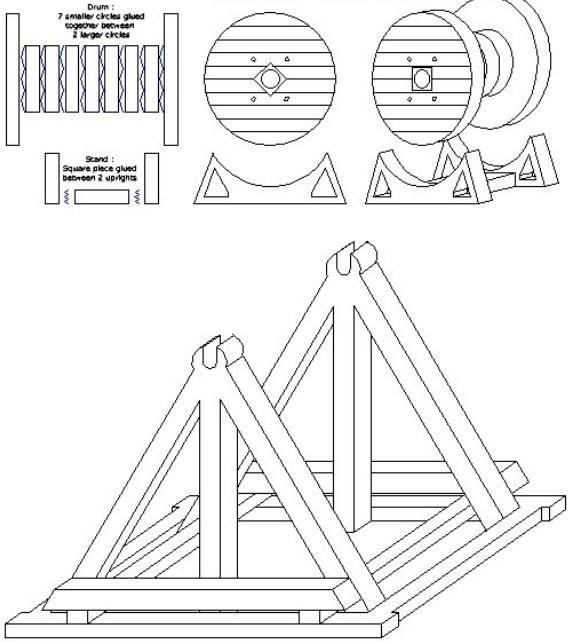

KS Laser Designs Ltd

KS51-01-03

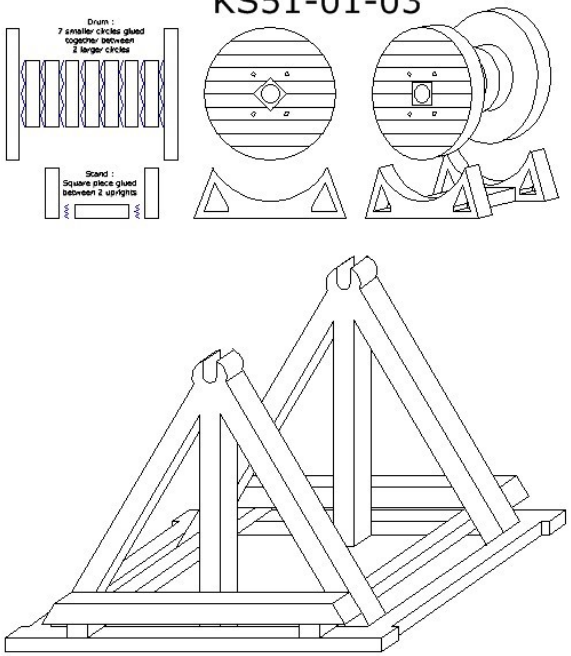

KS Laser Designs Ltd

KS51-01-03

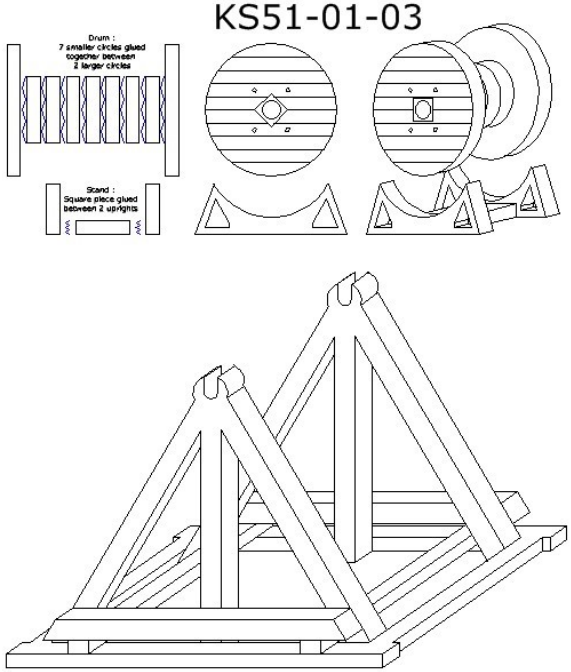

KS Laser Designs Ltd

KS51-01-03

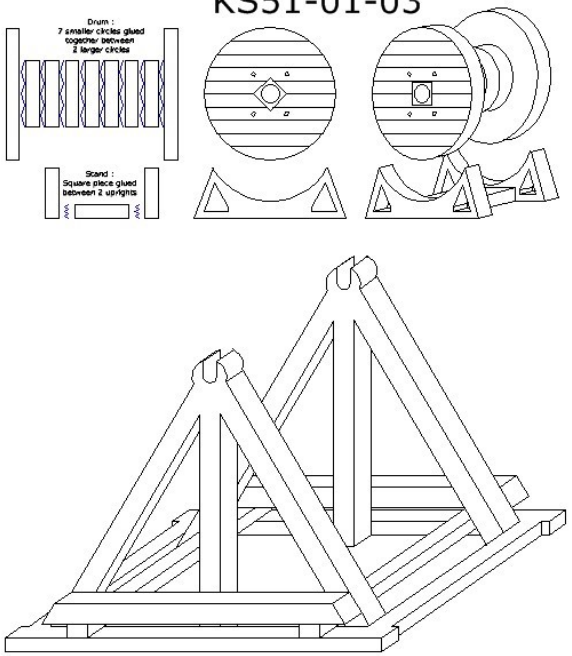

KS Laser Designs Ltd